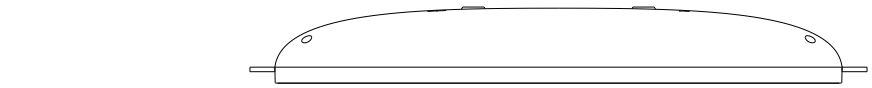

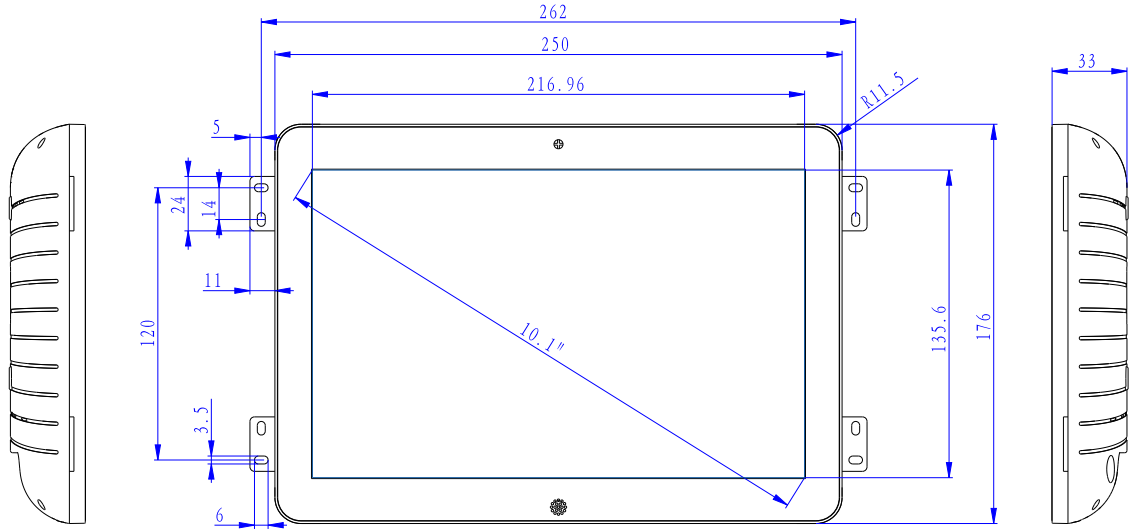

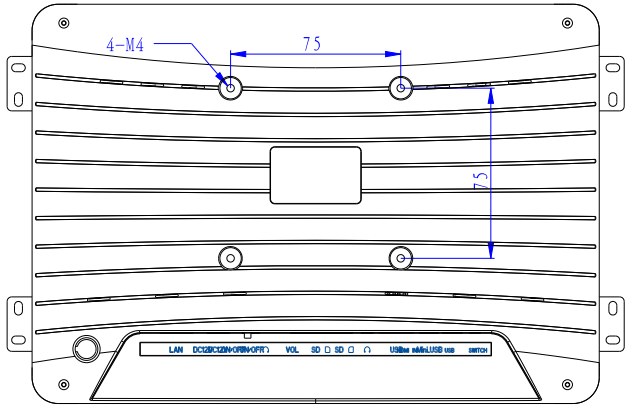

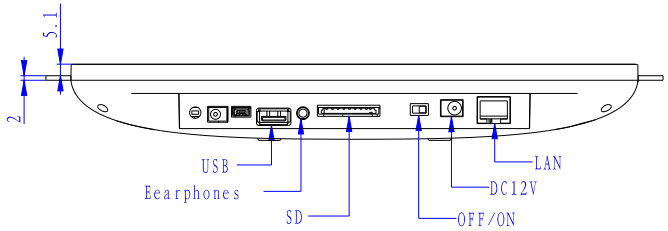

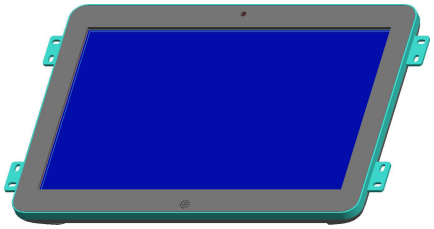

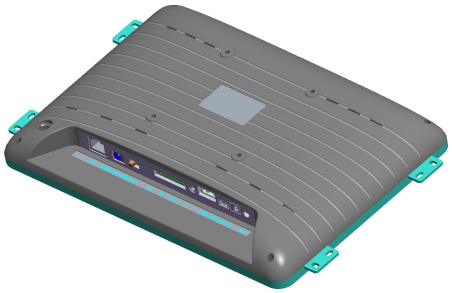

	NEW	张 建	2016-06-11
NO.	DESCRIPTION	NAME	DATE

GENERAL TOLERANCE				UNITS:	SCALE:	THIRD ANGLE
ANGLE:0.5° DECIMAL:±				mm	1:1	
>0-10	0.05	0.10	0.20	TITLE:	MODEL:	DRAWING NO.
>10-200	0.10	0.20	0.40	ASSY	AC-1012OF-AIO-T	
>200	0.20	0.40	0.80	DRAWN:	CHECKED:	APPROVAL:
SHEET: 1 OF 1				张 建		